Excellent skin packaging with the

R 272 CD Packaging system

R 272 CD Packaging system

MULTIVAC

Excellent skin packaging with the CRYOVAC® Darfresh® packaging syst

The DARFRESH® VSP packaging system

The DARFRESH® VSP packaging process uses specially formulated top and bottom webs to create a vacuum skin consumer pack that encloses the product like a second skin to give it a totally natural presentation.

The webs drape themselves gently but

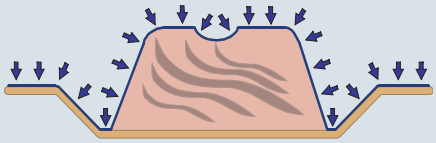

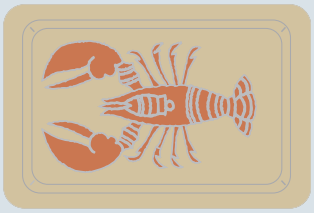

firmly around every contour of the product, whatever its shape or size.

The top web is totally surface sealed to the bottom web to provide an hermetically sealed pack.

The result is a pack

- with a high vacuum that guarantees a long shelf life

- with a practically invisible top web that surrounds the product like a second skin, giving it a natural look for maximum merchandising appeal

- with total surface sealing that prevents juice migration and keeps surface decoration in place

- with an easy-peel corner for consumer convenience.

The key to this unique packaging system is the successful combination of the specially developed DARFRESH® packaging films and the R 272 CD and R 570 CD packaging machines that have been specifically designed for this application.

tem

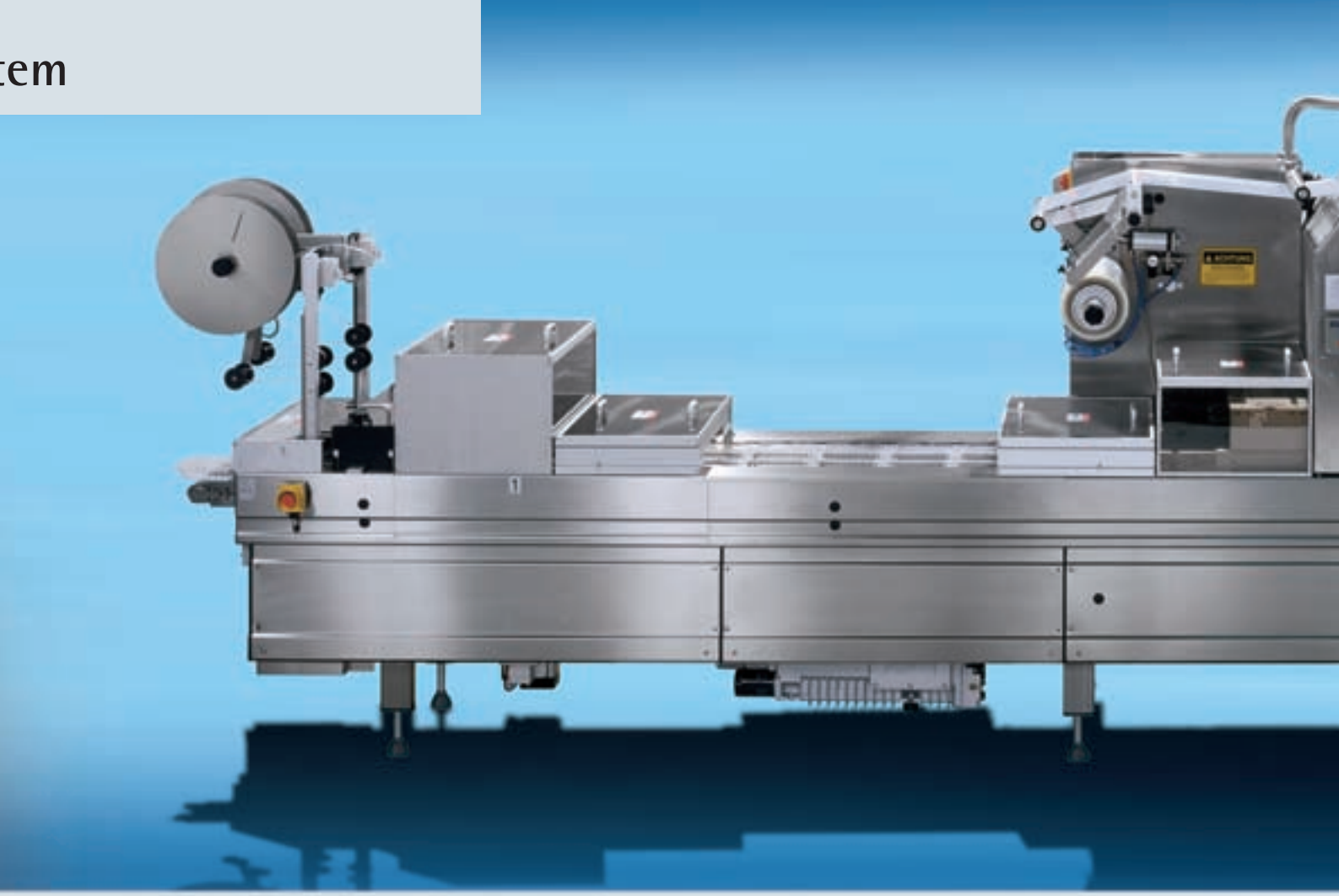

Cryovac and Multivac first collaborated back in the mid-eighties; the initial agreement was signed in 1987 and was renewed again in 1997 and 2001.

Multivac, which has specialised in the production of vacuum packaging machines for more than 40 years, has specially adapted its machines to run the unique DARFRESH® VSP system.

Worldwide more than 450 Darfresh machines type CD 6000, CD 44, R 270 CD and R 570 CD have been sold. Now the R 270 CD will be replaced by the new R 272 CD.

The DARFRESH® films

The sophisticated, mulilayer DARFRESH* films are available with different specifications to suit all skin packaging applications:

Top webs:
DARFRESH® TL
for low profile products

DARFRESH® TS
for products with more pronounced contours

DARFRESH® TC
for products of average height and for in-pack cooking

DARFRESH® TH
for very high or very hard products

DARFRESH® TP
printed film for low profile products.

Bottom webs:
Rigid PS films, available in a wide choice of colour and metallic finishes; or Rigid PP and XPP (foamed) films

DARFRESH® Vacuum skin packaging is the ideal consumer unit packaging solution for a wide variety of fresh and processed meats, seafoods, ... showing off all the products' natural shapes, colour and textures.

The MULTIVAC R 272 CD packaging machine

The Multivac R 272 CD is a variation of Multivac's proven R 240 FFS packaging machine, which has been adapted and optimised to produce DARFRESH* skin packs.

It shares the same impressive properties in areas such as design, hygiene and ease of maintenance, but differs in that it is equipped with special DARFRESH® forming and sealing dies as well as other modifications.

The R 272 CD is the basic model and is designed for medium capacity requirements and pack sizes. The R 570 CD should be chosen when high capacities and large packs are required.

Modular frame
The frame of the R 272 CD consists of a stable profile structure made from high-quality stainless steel. The square profiles for the sides of the frame are produced exclusively for Multivac by a special process using continuous stainless steel sections.

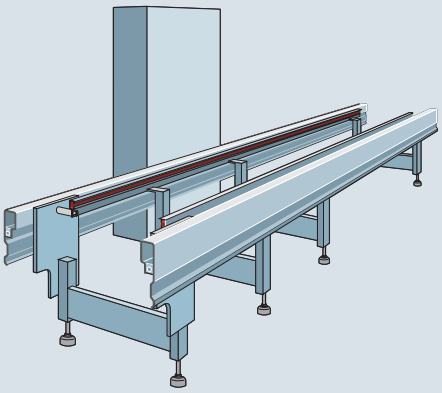

The modular concept on which it is based enables the R 272 CD to be adapted precisely to the product and the production conditions as well as to additional units and ancillary equipment.

MULTIVAC

Hygiene and operation

Hygiene and operation

Hygienic design
All the sensitive, hygienically relevant areas are accessible directly or after a few quick manual operations to permit simple and thorough cleaning. We satisfy the strict EU requirements for food-processing machines as a result.

The side panels of the R 272 CD are simple to remove, so access to the different parts of the machine for maintenance and servicing is fast and easy.

Positive belts, sealed bearings, an optional lubrication facility for the transport chain and a cleaning program (another option) are just a few examples that demonstrate how cleaning and maintenance work has been cut to a minimum.

Simple operation
The advanced microprocessor control unit stores settings and implements them accurately for temperatures, process times etc. The operator follows clear, logical paths in his/her own language to make input and view displays. The control terminal swivels and its height can be adjusted.

Competitive price
Even though it meets the highest quality standards, the R 272 CD is still supplied at a competitive price. This has been made possible by systematically configuring the machine for average capacity requirements and pack sizes. The R 570 CD is the ideal alternative when extremely large packs and higher capacities are needed.

MULTIVAC

Dimensions and technical data

All sizes in mm

A	Distance between die centres	2140 - 2680	2640 - 3180	3140 - 3680	3640 - 4180	4140 - 4680	5140 - 5680
RL	Frame length	4875	5875	5375	6375	6875	7375
X	Loading area	Depends on the cut-off length and the machine specification					
D	Discharge area	1600/2100/2600/3100/3600					
E	Machine width	610 + Machine-width					
F	Film unwind system	465					
H	Discharge conveyor	depending on application					
Films		Cryovac DARFRESH® films (rigid, flexible, foam)					
Web widths		320, 355, 420, 459, 466, 480, 520, 560					
Maximum cut-off length		400					
Maximum product height protruding above Filmlevel		55					
Maximum forming depth		45					
Maximum dome height		60					
Minimum pack dimensions		95 x 160					
Maximum pack dimensions		520 x 400					
Number of packs per cycle		1 - 10					
Maximum output		Depends on product and machine specification					

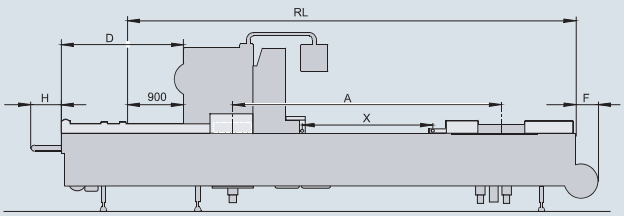

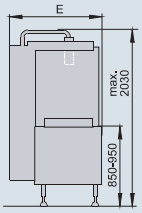

All dimensions are in mm. The required amounts of electrical power, compressed air and cooling water, as well as the weight of the machine, are dependent upon the machine specification.

*Cryovac and Darfresh are registered trademarks of Cryovac Inc. a subsidiary of Sealed Air Corporation

Multivac Sepp Haggenmüller GmbH & Co. KG
Bahnhofstraße 4 · D-87787 Wolfertschwenden · Germany
Telefon +49 (0) 8334 601 0 · Fax +49 (0) 8334 601 199

Multivac Export AG
Bösch 65 · CH-6331 Hünenberg · Switzerland · Telefon +41 (0) 41 780 65 65
Fax +41 (0) 41 780 65 10

Sealed Air GmbH
Cryovac Food Packaging Division Customer Equipment Centre
Dattenmattstrasse 21 · CH-6010 Kriens Switzerland
Tel +41 41 349 45 00 · Fax +41 41 349 45 47

99.341.1300.1010 © Multivac 6.5, cb 05/04 · Printed in Germany on chlorine-free paper • Subject to design changes as progress is made
Multivac is a registered trademark of Multivac Sepp Haggenmüller GmbH & Co. KG